RADIO SERVICE BULLETIN

Issue No. 38
Date of Issue: June, 1948
Subject: Model D141 Mantel

SPECIFICATION OF S.T.C. MODEL D141 Mantel

CIRCUIT: Four valve, A.C. operated superheterodyne with A.V.C. using converter, combined I.F. amplifier-detector, steep slope output pentode, and H.T. rectifier.

TUNING RANGE: 530—1620 Kc/s.

INTERMEDIATE FREQUENCY: 455 Kc/s.

VALVE COMPLEMENT:

V1 Frequency changer 6J8GA
V2 I.F. amplifier-detector 6G8G
V3 Power ouput 6AG6
V4 H.T. Rectifier 6X5GT

POWER SUPPLY:

200-240 volts, 40-60 cycles A.C.
Consumption 40 watts approx.

LOUD SPEAKER: Permag. 5" cone, 5000 ohm transformer.

CIRCUIT VOLTAGES:

	Plate	Screen	Osc. Plate	Cathode	Heater
V1	230	100	100	—	6.3
V2	230	100	—	—	6.3
V3	215	230	—	4.7	6.3
V4	230/230	—	—	233	6.3

These voltages must be measured to receiver earth with voltmeter having a resistance of at least 1000 ohms per volt (Tolerance ± 5%). Volume control must be turned to maximum.

MEASUREMENT SPECIFICATION:

I.F. Sensitivity—V1 grid 350 microvolts
I.F. Sensitivity—V2 grid 26 millivolts
Broadcast Sensitivity 40 microvolts average
These figures are related to an audio frequency output of 14 volts measured between plate of V3 and chassis, through a series condenser of .1MFD capacity.

ALIGNMENT FREQUENCIES: 1400 Kc/s. and 600 Kc/s.

CHECK POINTS: 1000 Kc/s.

MODEL D-141

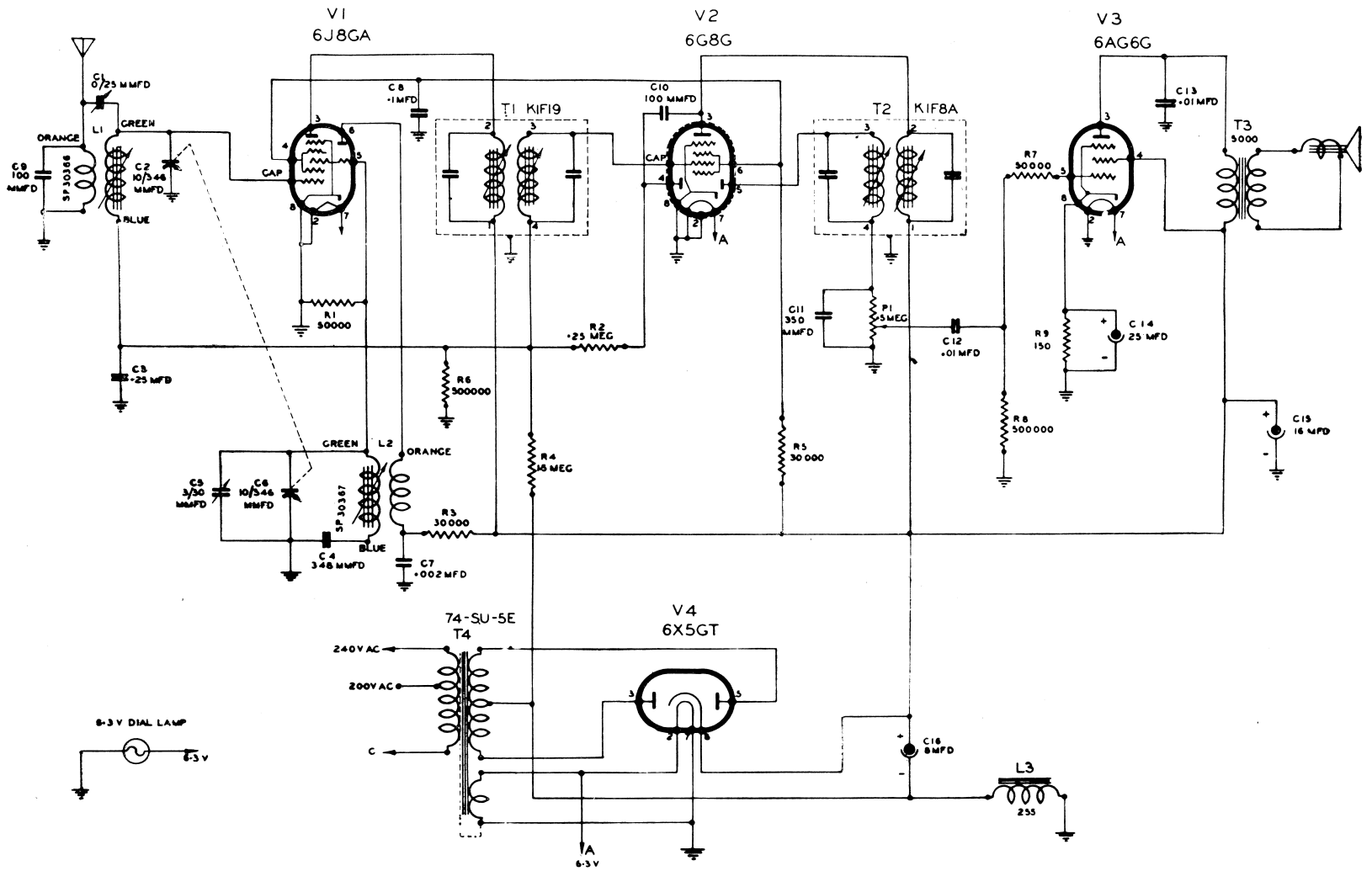
V1
6J8GA
V2
6G8G
V3
6AG6G
T1 KIF19
T2 KIF8A
T3
5000
C1
6/25 MMFD
L1
GREEN
ORANGE
BLUE
C9
100
MMFD
SP 30366
C2
10/346
MMFD
CAP
C8
·1MFD
C10
100 MMFD
C13
·01 MFD
R7
50000
R1
50000
R2
·25 MEG
C11
350
MMFD
P1
5MEG
C12
·01 MFD
R9
150
C14
25 MFD
C3
·25 MFD
R6
500000
R8
500000
C15
16 MFD
L2
C5
3/30
MMFD
C6
10/346
MMFD
SP 30367
C4
348 MMFD
R3
30000
C7
·002 MFD
R4
15 MEG
R5
30000
74-SU-5E
T4
240V AC
200V AC
C
V4
6X5GT
C16
8MFD
L3
255
6·3V DIAL LAMP
6·3V
A
6·3V